Sheet List		
Sheet Name	Sheet Number	Sheet Issue Date
COVER PAGE	G100	06/06/17
LEVEL 1 CODE ANALYSIS PLAN	G101	06/06/17
LEVEL 2 CODE ANALYSIS PLAN	G102	06/06/17
LEVEL 3 CODE ANALYSIS PLAN	G103	06/06/17
LEVEL 1 LIFE SAFETY PLAN	G105	06/06/17
LEVEL 2 LIFE SAFETY PLAN	G106	06/06/17
LEVEL3 LIFE SAFETY PLAN	G107	06/06/17
LEVEL 1 FLOOR PLAN	A101	06/06/17
LEVEL 2 FLOOR PLAN	A101A	06/06/17
LEVEL 3 FLOOR PLAN	A101B	06/06/17
LEVEL 1 POWER AND DATA PLAN	A102	06/06/17
LEVEL 2 POWER AND DATA PLAN	A102A	06/06/17
LEVEL 3 POWER AND DATA PLAN	A102B	06/06/17
BUILDING SECTIONS	A301	06/06/17

Sheet List		
Sheet Name	Sheet Number	Sheet Issue Date
PARTITION TYPES	A401	06/06/17
DETAIL DRAWINGS	A402	06/06/17
LEVEL 1 FURNITURE PLAN AND FINISH SCHEDULES	A501	06/06/17
LEVEL 2 FURNITURE PLAN AND FINISH SCHEDULES	A502	06/06/17
LEVEL 3 FURNITURE PLAN AND FINISH SCHEDULES	A503	06/06/17
DOOR SCHEDULE AND DOOR ELEVATIONS	A601	06/06/17
INTERIOR ELEVATIONS	A801	06/06/17
LEVEL 1 REFLECTED CEILING PLAN	A901	06/06/17
LEVEL 2 REFLECTED CEILING PLAN	A902	06/06/17
LEVEL 3 REFLECTED CEILING PLAN	A903	06/06/17
LEVEL 1 ACCESIBILITY PLAN	G108	06/07/17
LEVEL 2 ACCESIBILITY PLAN	G109	06/07/17
LEVEL 3 ACCESIBILITY PLAN	G110	06/07/17

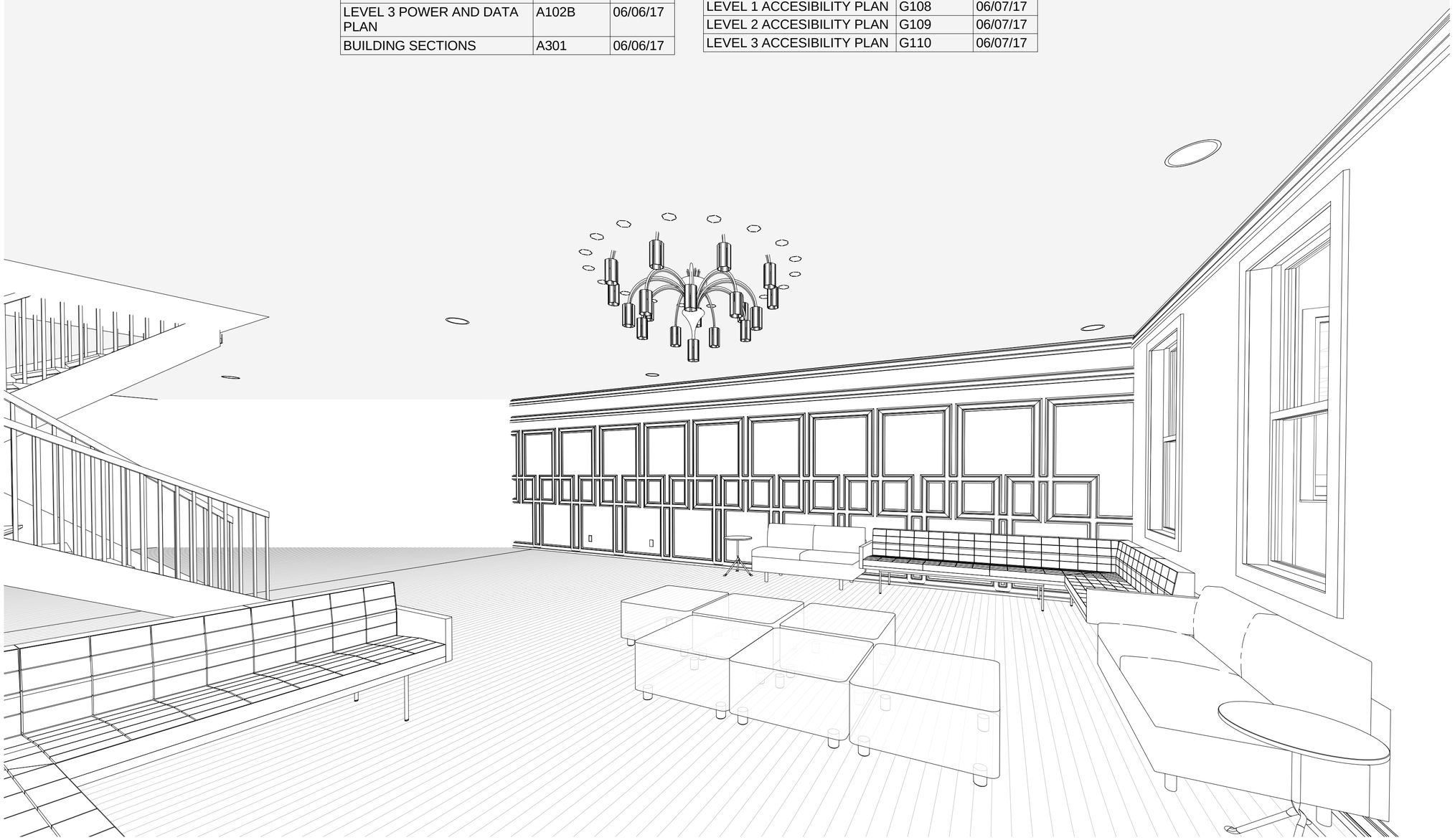

1 3D View 1

OUMIE M. JALLOW

CONSTRUCTION DOCUMENTS
THE INTERNATIONAL BOARDING SCHOOL
OF FREE THOUGHT

COVER PAGE

G100

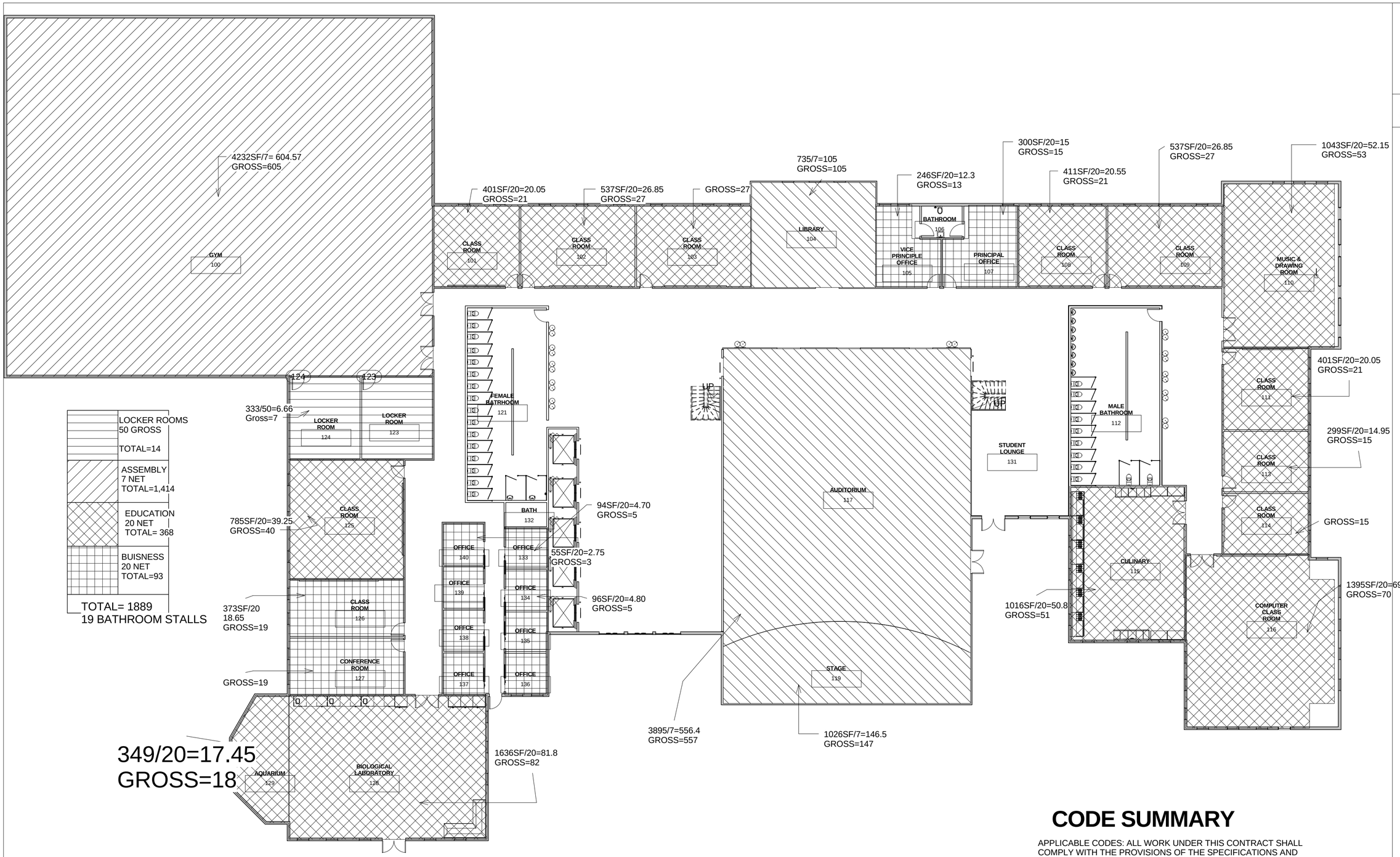

1 Level 1 Code Plan
1/16" = 1'-0"

CODE SUMMARY

APPLICABLE CODES: ALL WORK UNDER THIS CONTRACT SHALL COMPLY WITH THE PROVISIONS OF THE SPECIFICATIONS AND DRAWINGS, AND SHALL SATISFY ALL APPLICABLE CODES, ORDINANCES, AND REGULATIONS FOR ALL GOVERNING BODIES INVOLVED. ALL PERMITS AND LICENSES NECESSARY FOR THE PROPER EXECUTION OF THE WORK SHALL BE SECURED AND PAID FOR BY THE CONTRACTOR INVOLVED.
BUILDING CODE: 2012 INTERNATIONAL BUILDING CODE
2009 INTERNATIONAL EXISTING BUILDING CODE
PLUMBING CODE: 2009 INTERNATIONAL PLUMBING CODE
MECHANICAL CODE: 2009 INTERNATIONAL MECHANICAL CODE
OCCUPANCY: GROUP B - BUSINESS
REQ. SEPARATIONS: 1 HR BETWEEN TENANTS
CONSTRUCTION TYPE: III B - NONSPRINKLERED
NUMBER OF STORIES: TWO
OCCUPANCY AREA AND LOAD BY LEVEL
LEVEL 2 : 4,680 SF
OCCUPANCY LOAD: @1 PER 100 SF = 47
LAW OFFICE OCCUPANCY LOAD: 1000 SF
@ 1 PER 100 SF = 10
EGREE WIDTH (SECTION 1005.1)
EGREE WIDTH: 49 OCCUPANTS * .2 = 9.8 REQUIRED < 48" PROVIDED
TRAVEL DISTANCE LIMITATIONS (SECTION 1016.1)
GROUP B: 200' MAX TRAVEL DISTANCE ALLOWED > 83'-5" PROVIDED
EXITS MINIMUM NUMBER REQUIRED (SECTION 1021.2)
GROUP 8, SECOND STORY OCCUPANT LOAD 47 > 29, 2 EXITS REQUIRED = 2 EXITS PROVIDED
1021.2.1 - MIXED OCCUPANCIES, LAW OFFICE OCCUPANY = 10 < 29
1 EXIT REQUIRED = 1 EXIT PROVIDED

OUMIE M. JALLOW

CONSTRUCTION DOCUMENTS
THE INTERNATIONAL BOARDING SCHOOL
OF FREE THOUGHT

LEVEL 1 CODE ANALYSIS PLAN

G101

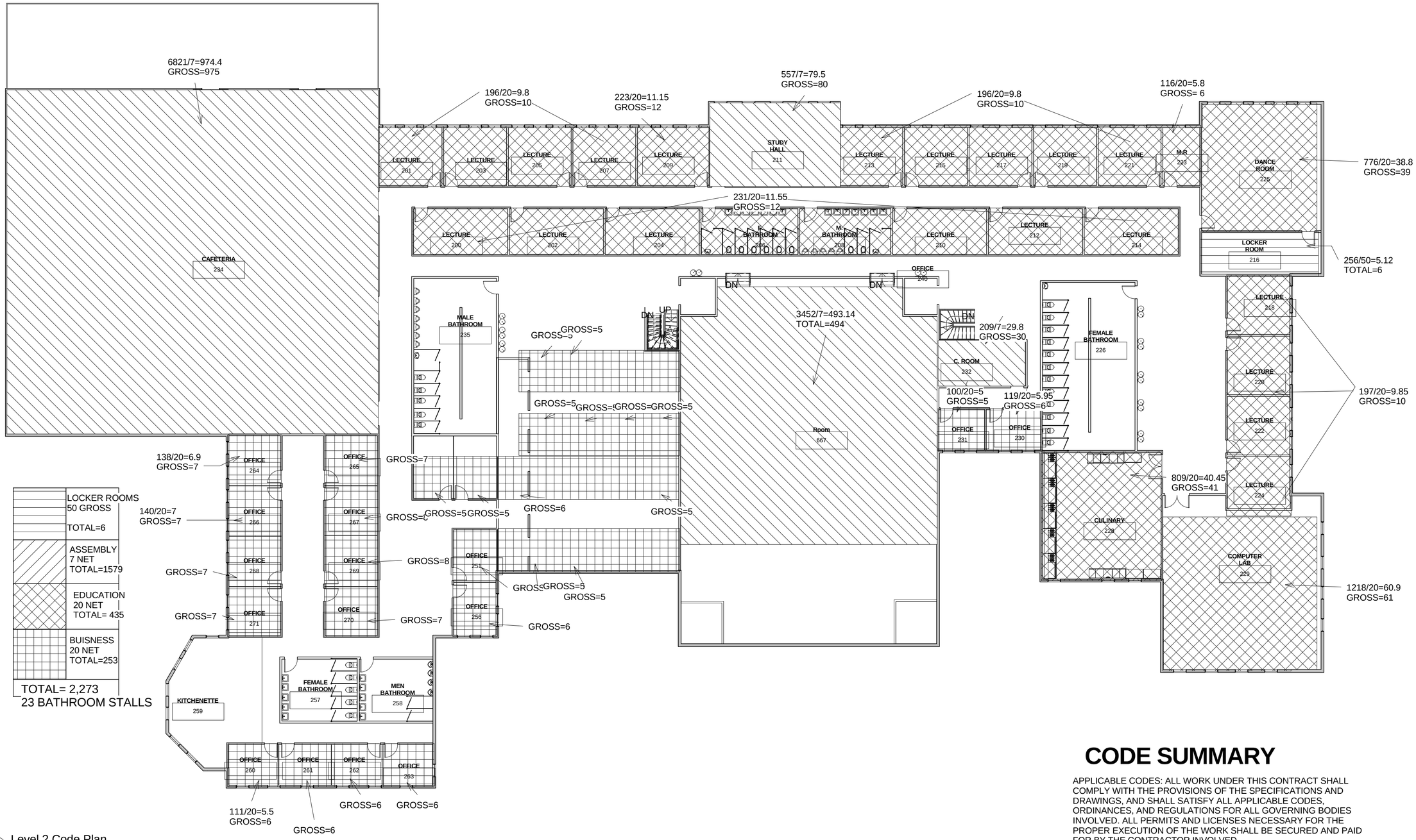

1 Level 2 Code Plan
1/16" = 1'-0"

CODE SUMMARY

APPLICABLE CODES: ALL WORK UNDER THIS CONTRACT SHALL COMPLY WITH THE PROVISIONS OF THE SPECIFICATIONS AND DRAWINGS, AND SHALL SATISFY ALL APPLICABLE CODES, ORDINANCES, AND REGULATIONS FOR ALL GOVERNING BODIES INVOLVED. ALL PERMITS AND LICENSES NECESSARY FOR THE PROPER EXECUTION OF THE WORK SHALL BE SECURED AND PAID FOR BY THE CONTRACTOR INVOLVED.
BUILDING CODE: 2012 INTERNATIONAL BUILDING CODE
2009 INTERNATIONAL EXISTING BUILDING CODE
PLUMBING CODE: 2009 INTERNATIONAL PLUMBING CODE
MECHANICAL CODE: 2009 INTERNATIONAL MECHANICAL CODE
OCCUPANCY: GROUP B - BUSINESS
REQ. SEPARATIONS: 1 HR BETWEEN TENANTS
CONSTRUCTION TYPE: III B - NONSPRINKLERED
NUMBER OF STORIES: TWO
OCCUPANCY AREA AND LOAD BY LEVEL
LEVEL 2 : 4,680 SF
OCCUPANCY LOAD: @1 PER 100 SF = 47
LAW OFFICE OCCUPANCY LOAD: 1000 SF
@ 1 PER 100 SF = 10
EGREE WIDTH (SECTION 1005.1)
EGREE WIDTH: 49 OCCUPANTS * .2 = 9.8 REQUIRED < 48" PROVIDED
TRAVEL DISTANCE LIMITATIONS (SECTION 1016.1)
GROUP B: 200' MAX TRAVEL DISTANCE ALLOWED > 83'-5" PROVIDED
EXITS MINIMUM NUMBER REQUIRED (SECTION 1021.2)
GROUP 8, SECOND STORY OCCUPANT LOAD 47 > 29, 2 EXITS REQUIRED = 2 EXITS PROVIDED
1021.2.1 - MIXED OCCUPANCIES, LAW OFFICE OCCUPANY = 10 < 29
1 EXIT REQUIRED = 1 EXIT PROVIDED

OUMIE M. JALLOW

CONSTRUCTION DOCUMENTS
THE INTERNATIONAL BOARDING SCHOOL OF FREE THOUGHT

LEVEL 2 CODE ANALYSIS PLAN

G102

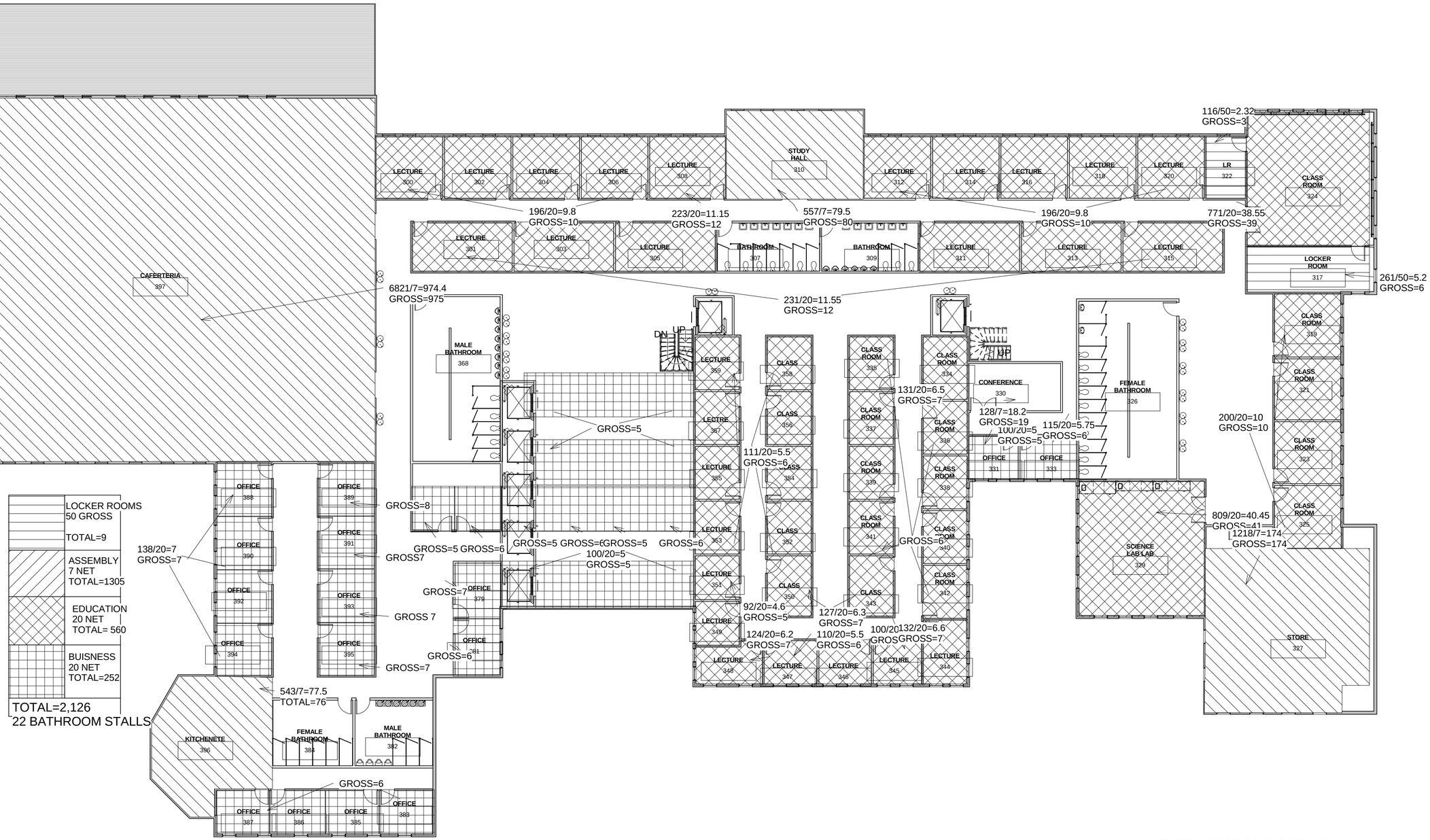

1 Level 3 Code Plan
1/16" = 1'-0"

CODE SUMMARY

APPLICABLE CODES: ALL WORK UNDER THIS CONTRACT SHALL COMPLY WITH THE PROVISIONS OF THE SPECIFICATIONS AND DRAWINGS, AND SHALL SATISFY ALL APPLICABLE CODES, ORDINANCES, AND REGULATIONS FOR ALL GOVERNING BODIES INVOLVED. ALL PERMITS AND LICENSES NECESSARY FOR THE PROPER EXECUTION OF THE WORK SHALL BE SECURED AND PAID FOR BY THE CONTRACTOR INVOLVED.
BUILDING CODE: 2012 INTERNATIONAL BUILDING CODE
2009 INTERNATIONAL EXISTING BUILDING CODE
PLUMBING CODE: 2009 INTERNATIONAL PLUMBING CODE
MECHANICAL CODE: 2009 INTERNATIONAL MECHANICAL CODE
OCCUPANCY: GROUP B - BUSINESS
REQ. SEPARATIONS: 1 HR BETWEEN TENANTS
CONSTRUCTION TYPE: III B - NONSPRINKLERED
NUMBER OF STORIES: TWO
OCCUPANCY AREA AND LOAD BY LEVEL
LEVEL 2 : 4,680 SF
OCCUPANCY LOAD: @1 PER 100 SF = 47
LAW OFFICE OCCUPANCY LOAD: 1000 SF
@ 1 PER 100 SF = 10
EGREE WIDTH (SECTION 1005.1)
EGREE WIDTH: 49 OCCUPANTS * .2 = 9.8 REQUIRED < 48" PROVIDED
TRAVEL DISTANCE LIMITATIONS (SECTION 1016.1)
GROUP B: 200' MAX TRAVEL DISTANCE ALLOWED > 83'-5" PROVIDED
EXITS MINIMUM NUMBER REQUIRED (SECTION 1021.2)
GROUP 8, SECOND STORY OCCUPANT LOAD 47 > 29, 2 EXITS REQUIRED = 2 EXITS PROVIDED
1021.2.1 - MIXED OCCUPANCIES, LAW OFFICE OCCUPANY = 10 < 29
1 EXIT REQUIRED = 1 EXIT PROVIDED

OUMIE M. JALLOW

CONSTRUCTION DOCUMENTS
THE INTERNATIONAL BOARDING SCHOOL
OF FREE THOUGHT

LEVEL 3 CODE ANALYSIS PLAN

G103

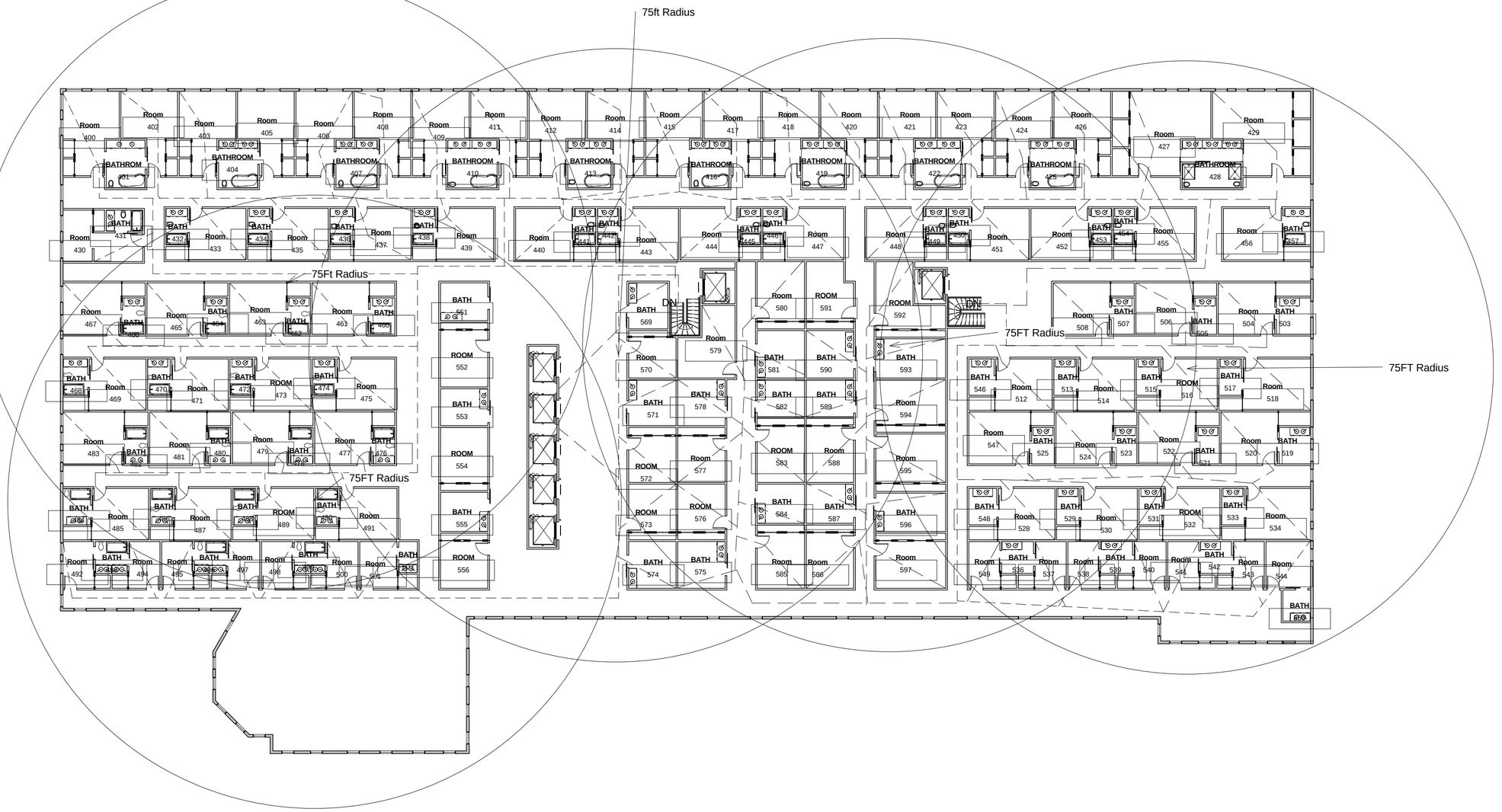

1 Level 4 Life Safety
1" = 20'-0"

OUMIE M. JALLOW

CONSTRUCTION DOCUMENTS
THE INTERNATIONAL BOARDING SCHOOL
OF FREETOWN

LEVEL 1 LIFE SAFETY PLAN

G105

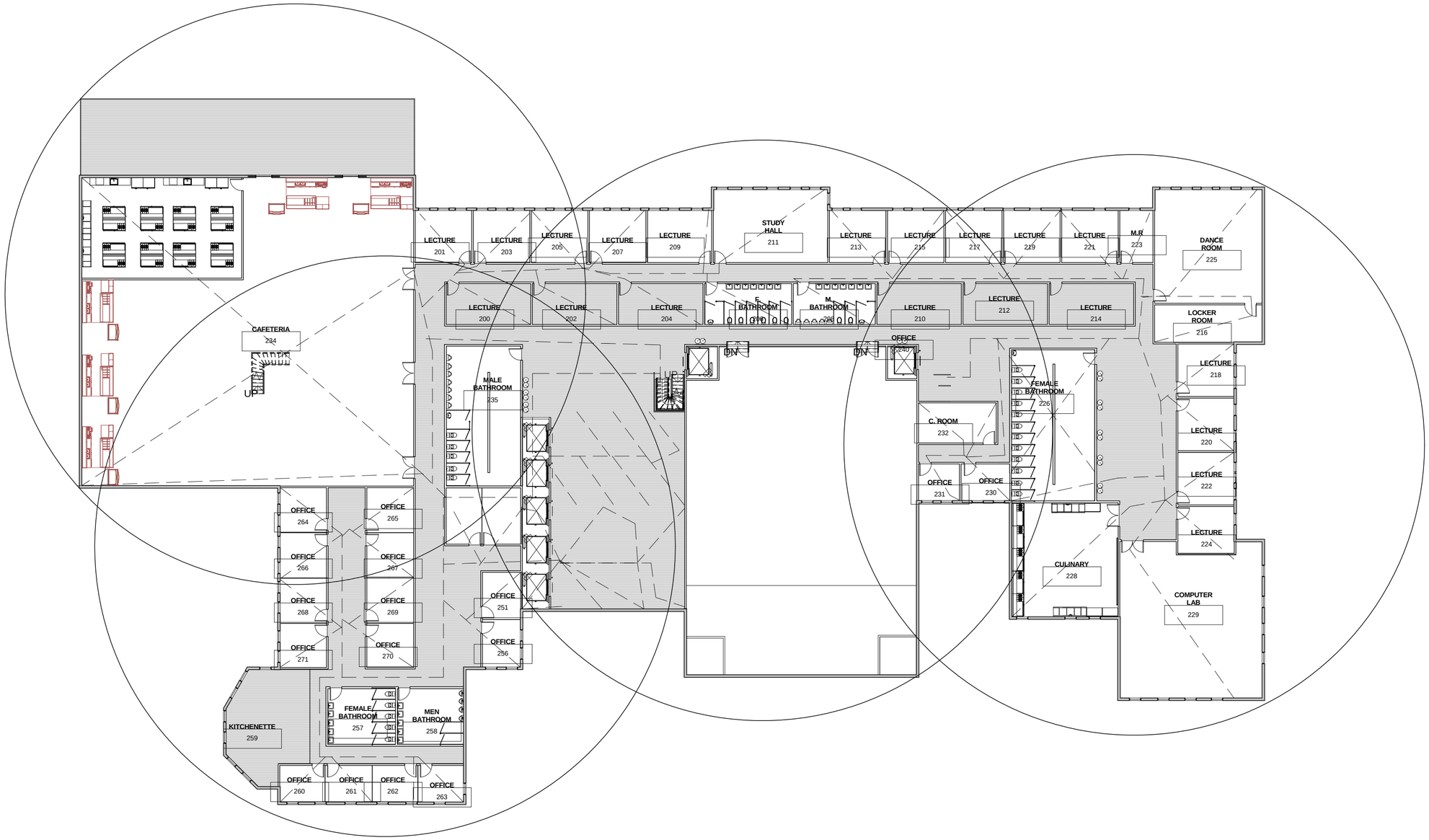

1 Level 2 Life Safety Plan
1" = 20'-0"

OUMIE M. JALLOW

CONSTRUCTION DOCUMENTS
THE INTERNATIONAL BOARDING SCHOOL
OF FREE THOUGHT

LEVEL 2 LIFE SAFETY PLAN

G106

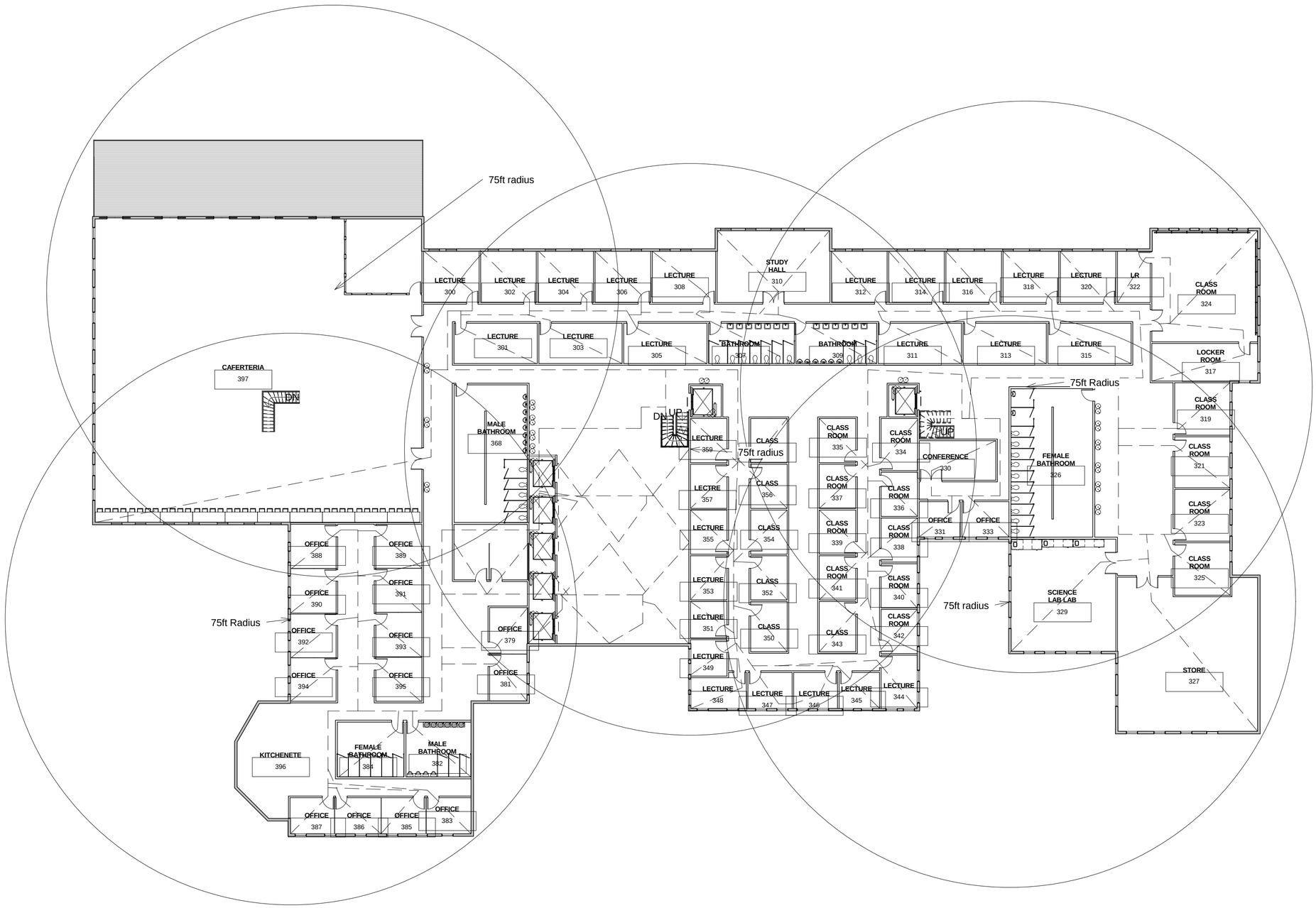

1 Level 3 Life Safety Plan
1" = 20'-0"

OUMIE M. JALLOW

CONSTRUCTION DOCUMENTS
THE INTERNATIONAL BOARDING SCHOOL
OF FREETOWN

LEVEL3 LIFE SAFETY PLAN

G107

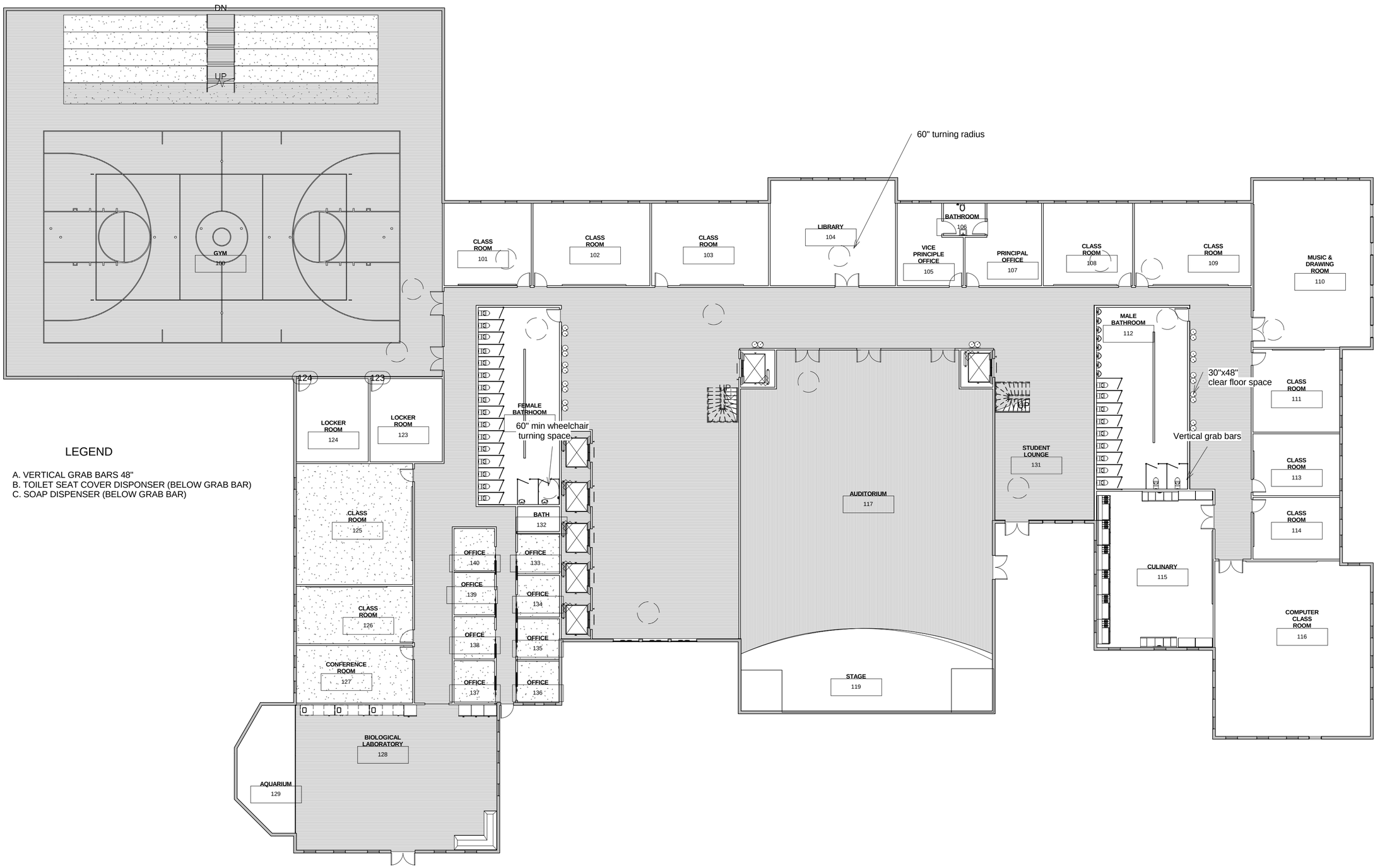

LEGEND

A. VERTICAL GRAB BARS 48"
B. TOILET SEAT COVER DISPONSER (BELOW GRAB BAR)
C. SOAP DISPENSER (BELOW GRAB BAR)

1 Level 1 Acessibility Plan
1/16" = 1'-0"

OUMIE M. JALLOW

CONSTRUCTION DOCUMENTS
THE INTERNATIONAL BOARDING SCHOOL
OF FREETOWN

LEVEL 1
ACCESIBILITY
PLAN

G108



LEGEND

A. VERTICAL GRAB BARS 48"
B. TOILET SEAT COVER DISPONSER (BELOW GRAB BAR)
C. SOAP DISPENSER (BELOW GRAB BAR)

1 Level 2 Accesibility plan
1/16" = 1'-0"

OUMIE M. JALLOW

CONSTRUCTION DOCUMENTS
THE INTERNATIONAL BOARDING SCHOOL
OF FREE THOUGHT

LEVEL 2
ACCESIBILITY
PLAN

G109

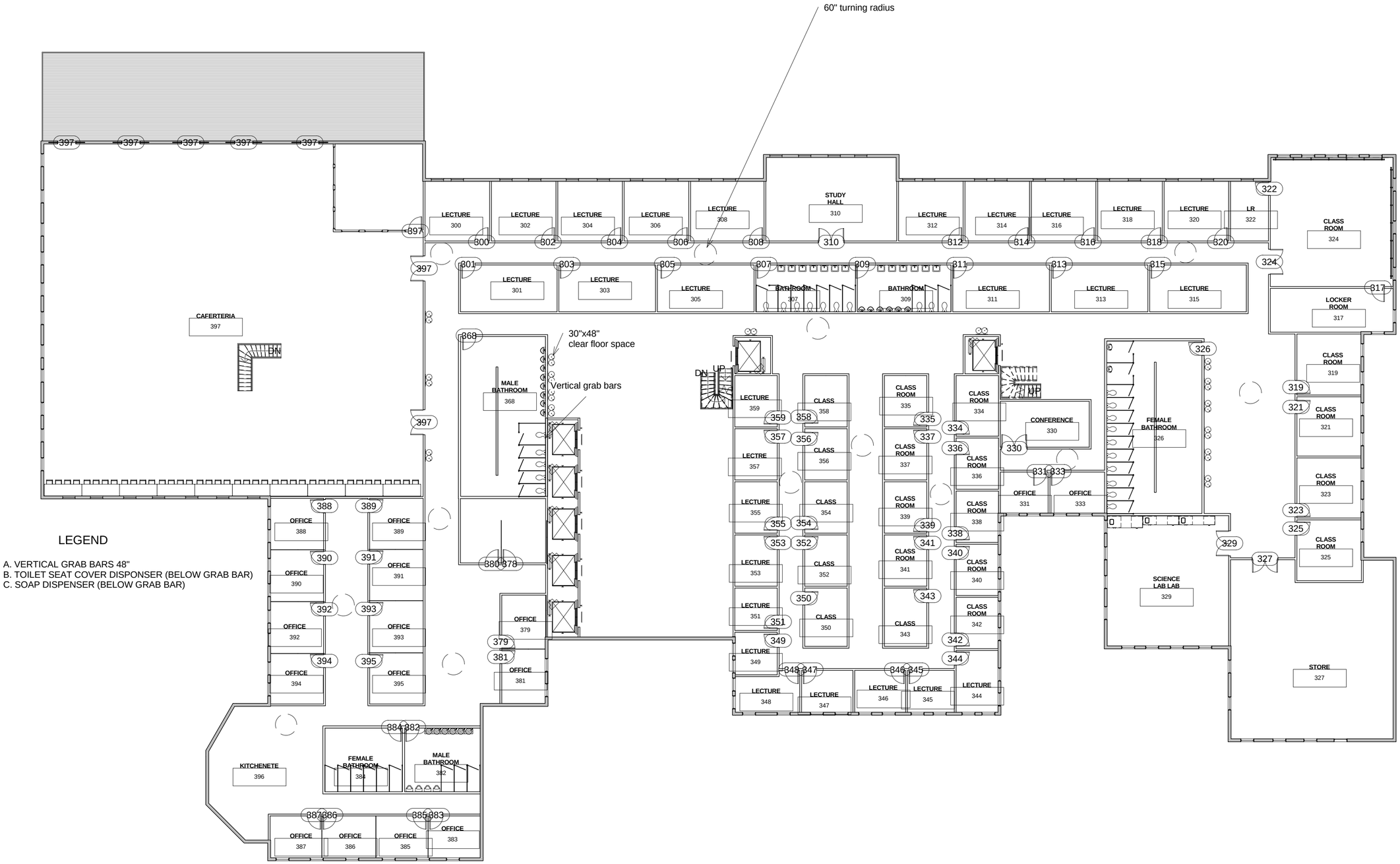

LEGEND

A. VERTICAL GRAB BARS 48"
B. TOILET SEAT COVER DISPONSER (BELOW GRAB BAR)
C. SOAP DISPENSER (BELOW GRAB BAR)

1 Level 3 ACCESSIBILITY PLAN
1/16" = 1'-0"

OUMIE M. JALLOW

CONSTRUCTION DOCUMENTS
THE INTERNATIONAL BOARDING SCHOOL
OF FREE THOUGHT

LEVEL 3 ACCESIBILITY PLAN

G110

ALL WALLS ARE P1 ULESS NOTED

GYM 100
CLASS ROOM 101
CLASS ROOM 102
CLASS ROOM 103
LIBRARY 104
BATHROOM 106
VICE PRINCIPLE OFFICE 105
PRINCIPAL OFFICE 107
CLASS ROOM 108
CLASS ROOM 109
MUSIC & DRAWING ROOM 110
MALE BATHROOM 112
CLASS ROOM 111
CLASS ROOM 113
CLASS ROOM 114
LOCKER ROOM 124
LOCKER ROOM 123
FEMALE BATHROOM 121
CLASS ROOM 125
CLASS ROOM 126
CONFERENCE ROOM 127
BIOLOGICAL LABORATORY 128
AQUARIUM 129
BATH 132
OFFICE 140
OFFICE 133
OFFICE 139
OFFICE 134
OFFCE 138
OFFICE 135
OFFICE 137
OFFICE 136
AUDITORIUM 117
STAGE 119
STUDENT LOUNGE 131
CULINARY 115
COMPUTER CLASS ROOM 116

1 Level 1
1/16" = 1'-0"

OUMIE M. JALLOW

CONSTRUCTION DOCUMENTS
THE INTERNATIONAL BOARDING SCHOOL
OF FREETOWN

LEVEL 1
FLOOR PLAN

A101

ALL WALLS ARE P1 ULESS NOTED

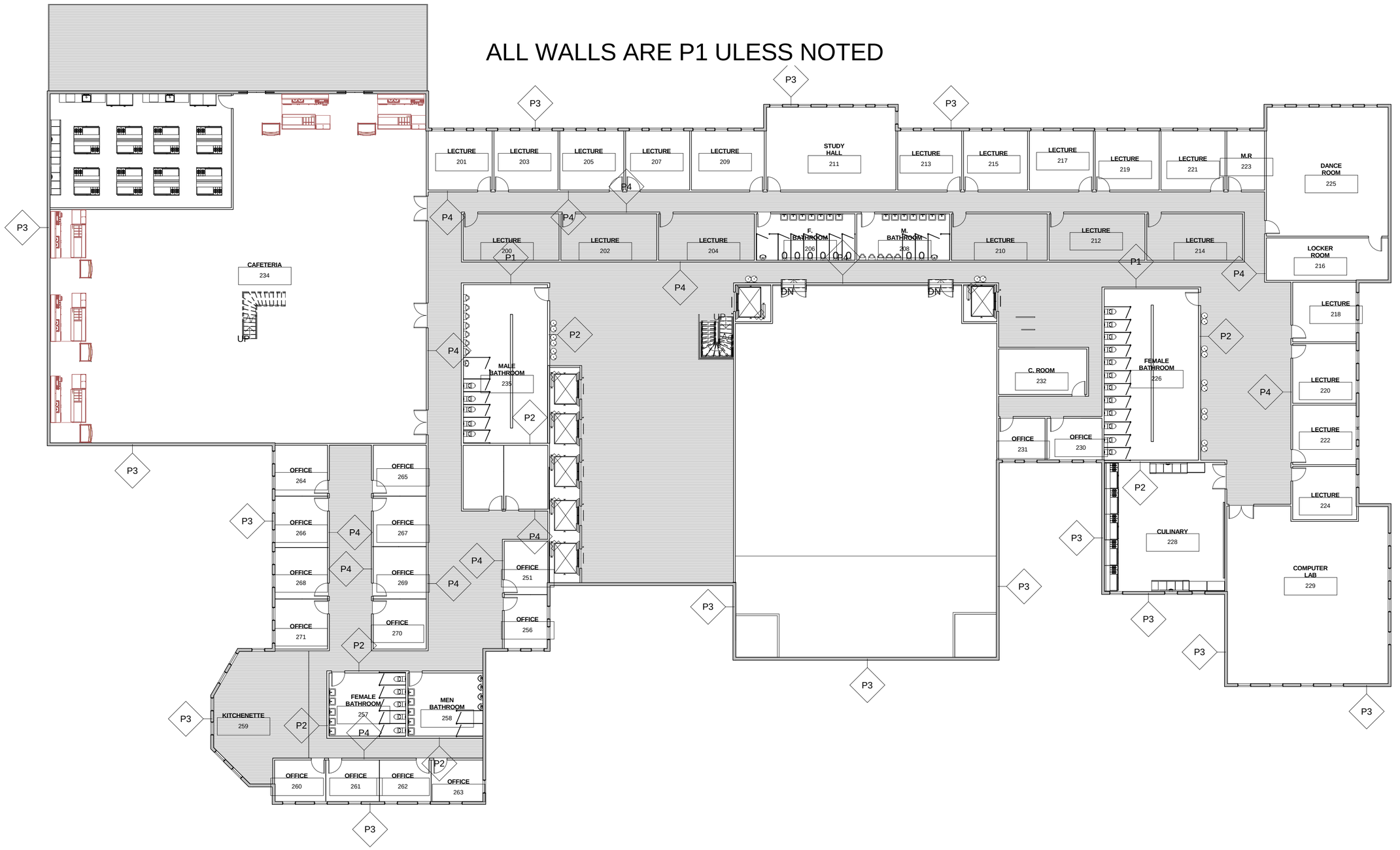

1 Level 2
1/16" = 1'-0"

OUMIE M. JALLOW

CONSTRUCTION DOCUMENTS
THE INTERNATIONAL BOARDING SCHOOL
OF FREE THOUGHT

LEVEL 2
FLOOR PLAN

SPRING QUARTER 2017

A101A

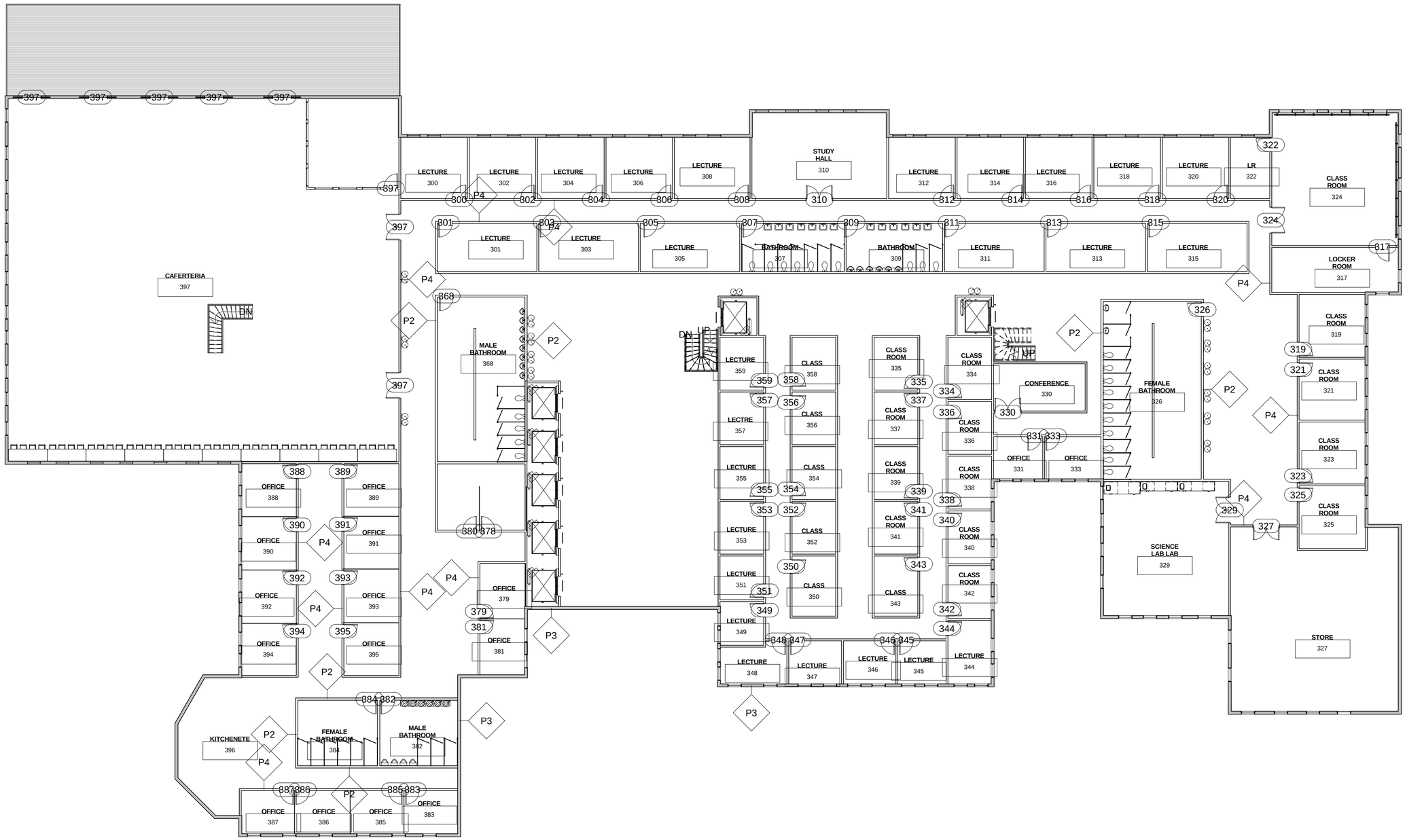

1 Level 3
1/16" = 1'-0"

OUMIE M. JALLOW

CONSTRUCTION DOCUMENTS
THE INTERNATIONAL BOARDING SCHOOL
OF FREETOWN

LEVEL 3
FLOOR PLAN

SPRING QUARTER 2017

A101B

OUMIE M. JALLOW

CONSTRUCTION DOCUMENTS
THE INTERNATIONAL BOARDING SCHOOL
OF FREE THOUGHT

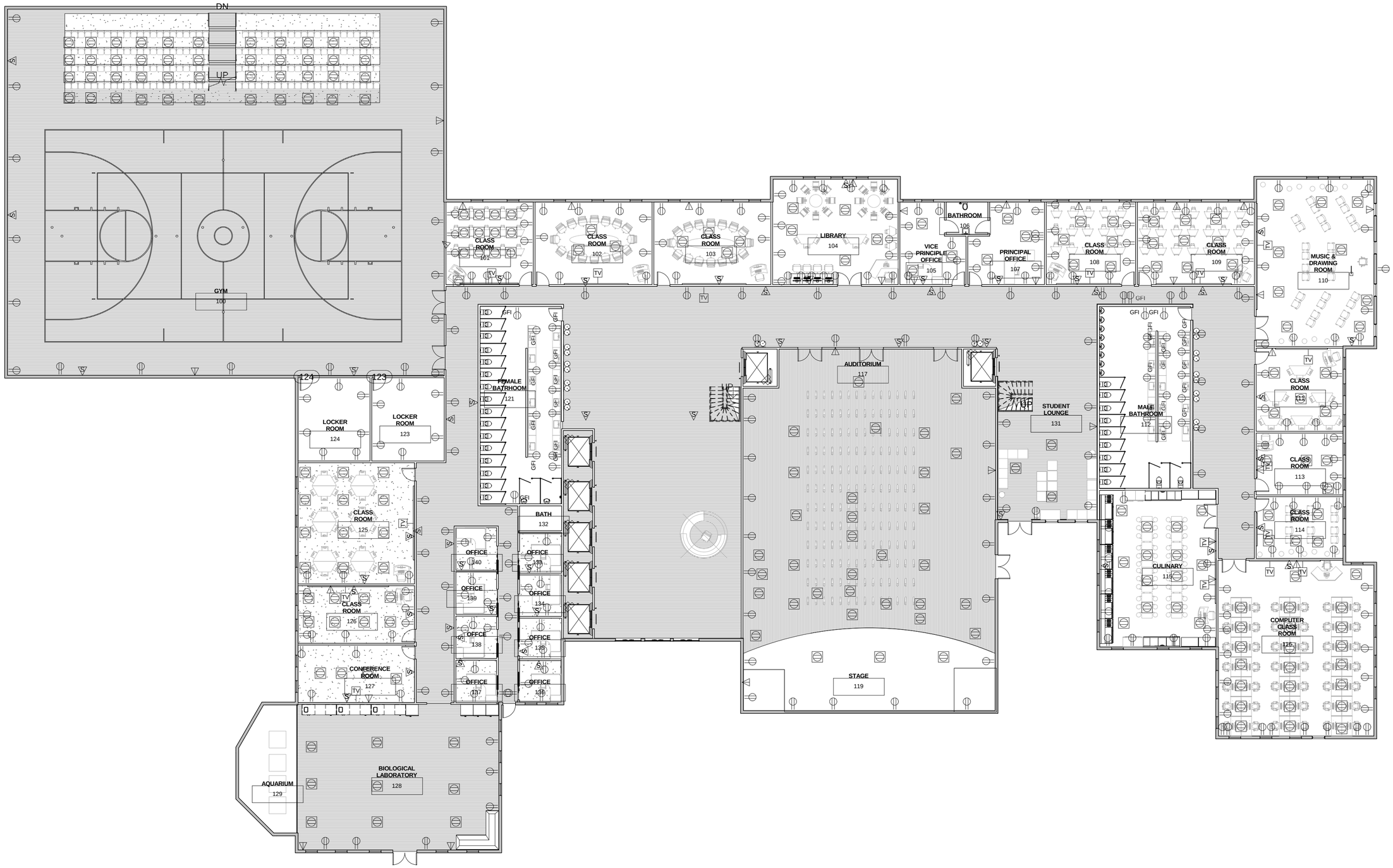

1 Level 1 Power and Data Plan
1/16" = 1'-0"

LEVEL 1
POWER AND
DATA PLAN

SPRING QUARTER 2017

A102



1 Level 2 Power and Data Plan
1/16" = 1'-0"

OUMIE M. JALLOW

CONSTRUCTION DOCUMENTS
THE INTERNATIONAL BOARDING SCHOOL
OF FREETOWN

LEVEL 2
POWER AND
DATA PLAN

SPRING QUARTER 2017

A102A

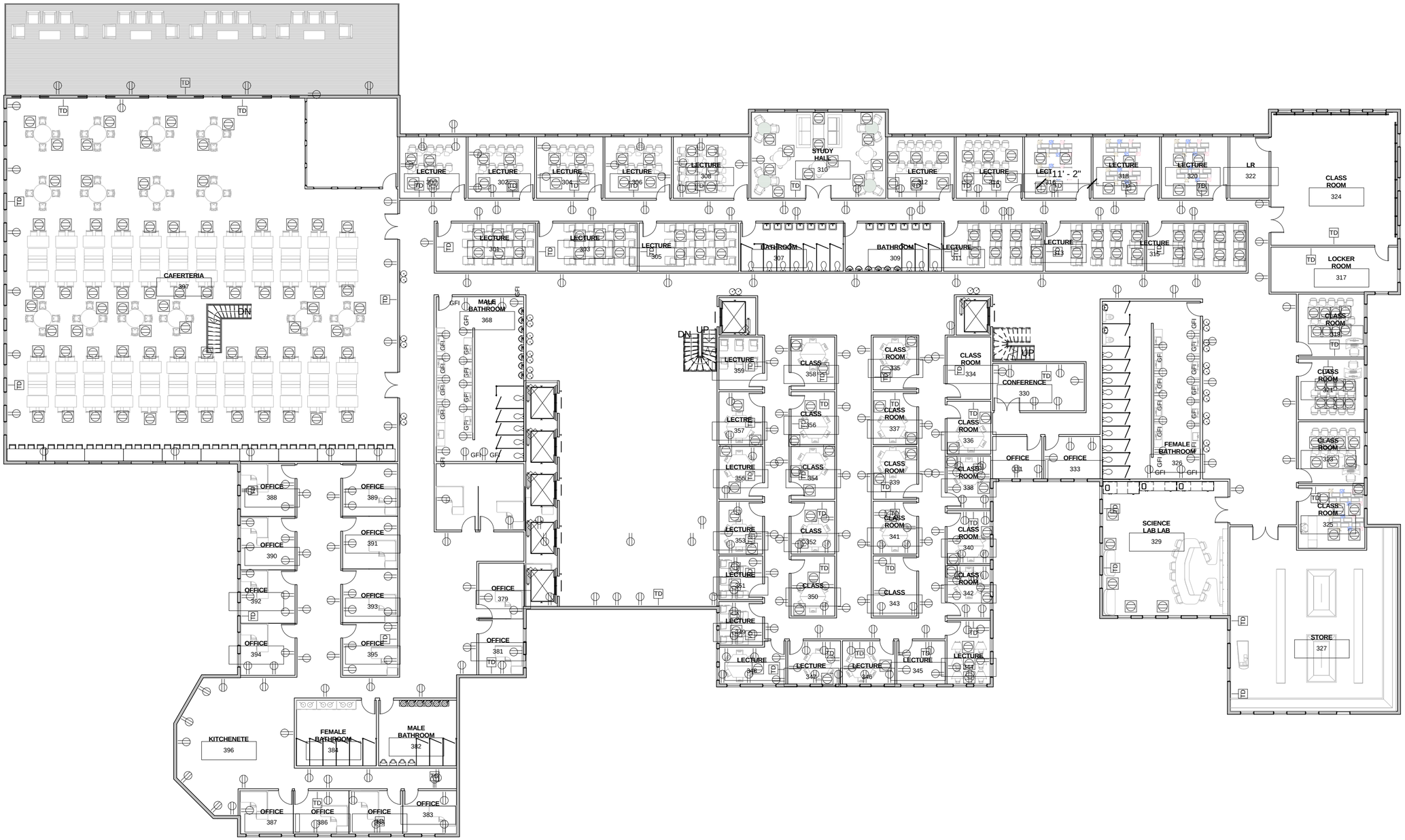

1 Level 3 Power and Data Plan
1/16" = 1'-0"

OUMIE M. JALLOW

CONSTRUCTION DOCUMENTS
THE INTERNATIONAL BOARDING SCHOOL
OF FREE THOUGHT

LEVEL 3
POWER AND
DATA PLAN

A102B



2 TRANSVERSE BUILDING SECTION
1" = 20'-0"

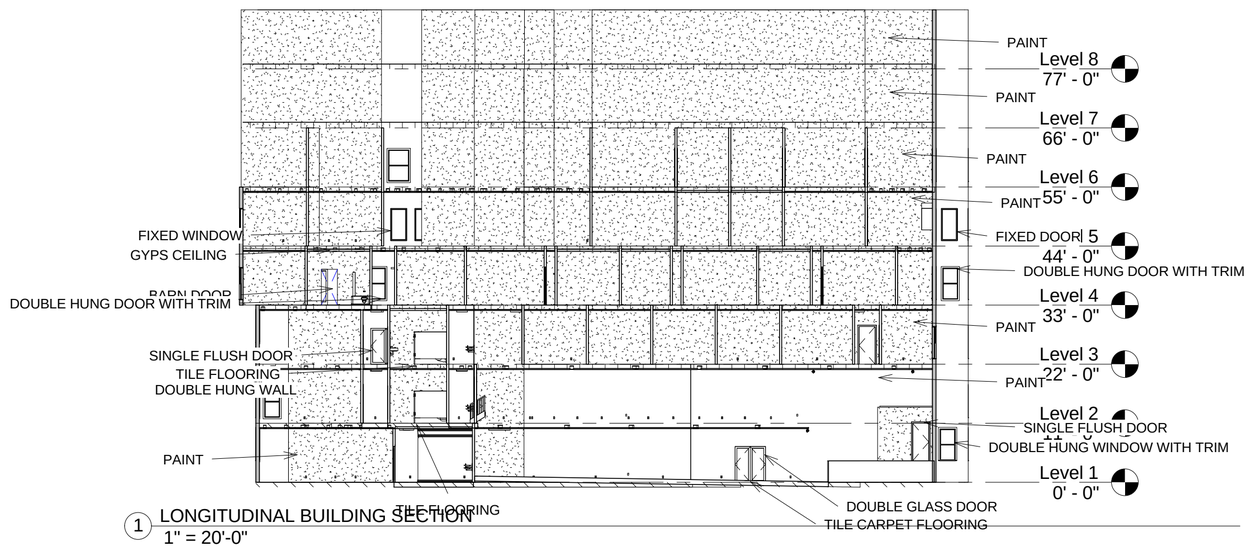

1 LONGITUDINAL BUILDING SECTION
1" = 20'-0"

OUMIE M. JALLOW

CONSTRUCTION DOCUMENTS
THE INTERNATIONAL BOARDING SCHOOL
OF FREE THOUGHT

BUILDING SECTIONS

A301

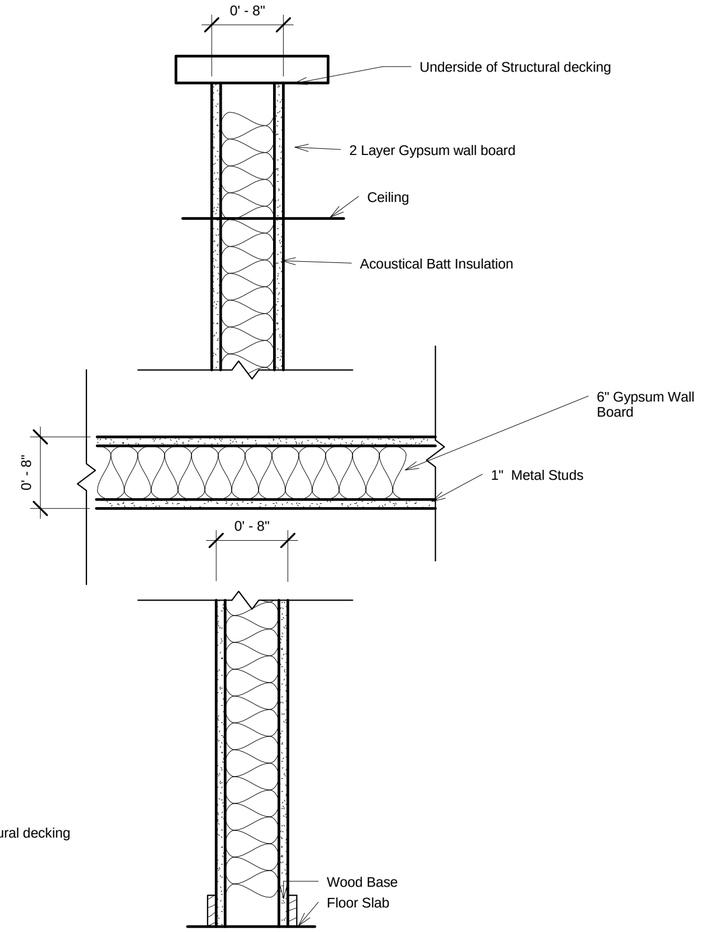

1 EXTERIOR WALL P3
1" = 1'-0"

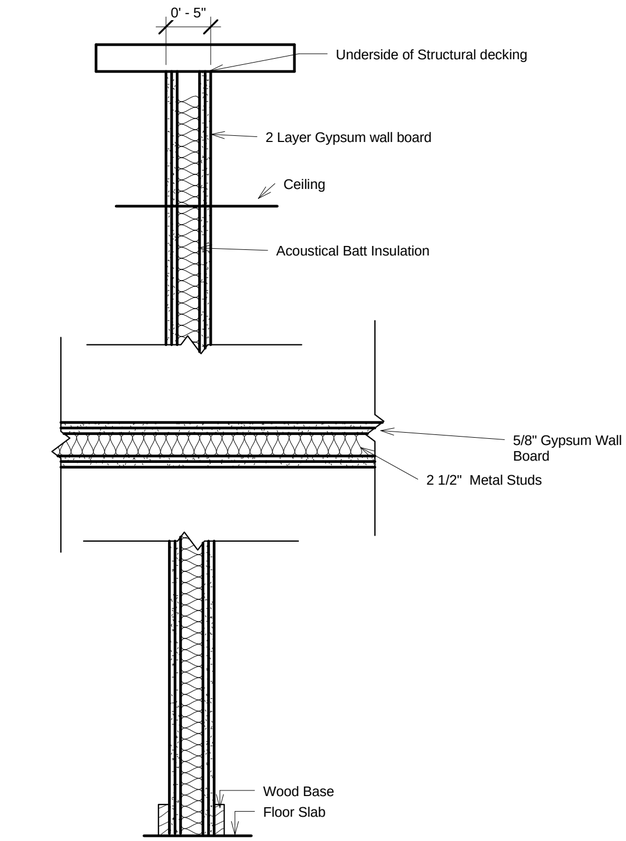

2 FIRE RATING WALLS P4
1" = 1'-0"

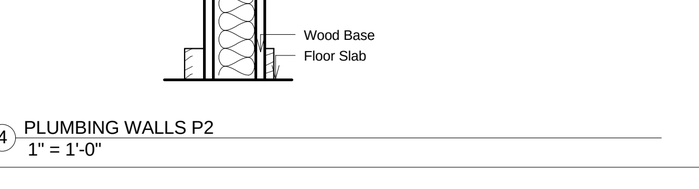

4 PLUMBING WALLS P2
1" = 1'-0"

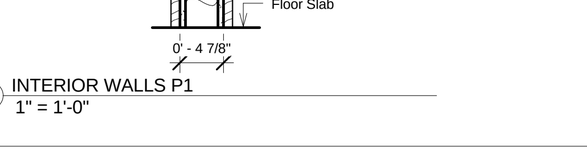

3 INTERIOR WALLS P1
1" = 1'-0"

OUMIE M. JALLOW

CONSTRUCTION DOCUMENTS
THE INTERNATIONAL BOARDING SCHOOL
OF FREE THOUGHT

PARTITION TYPES

A401

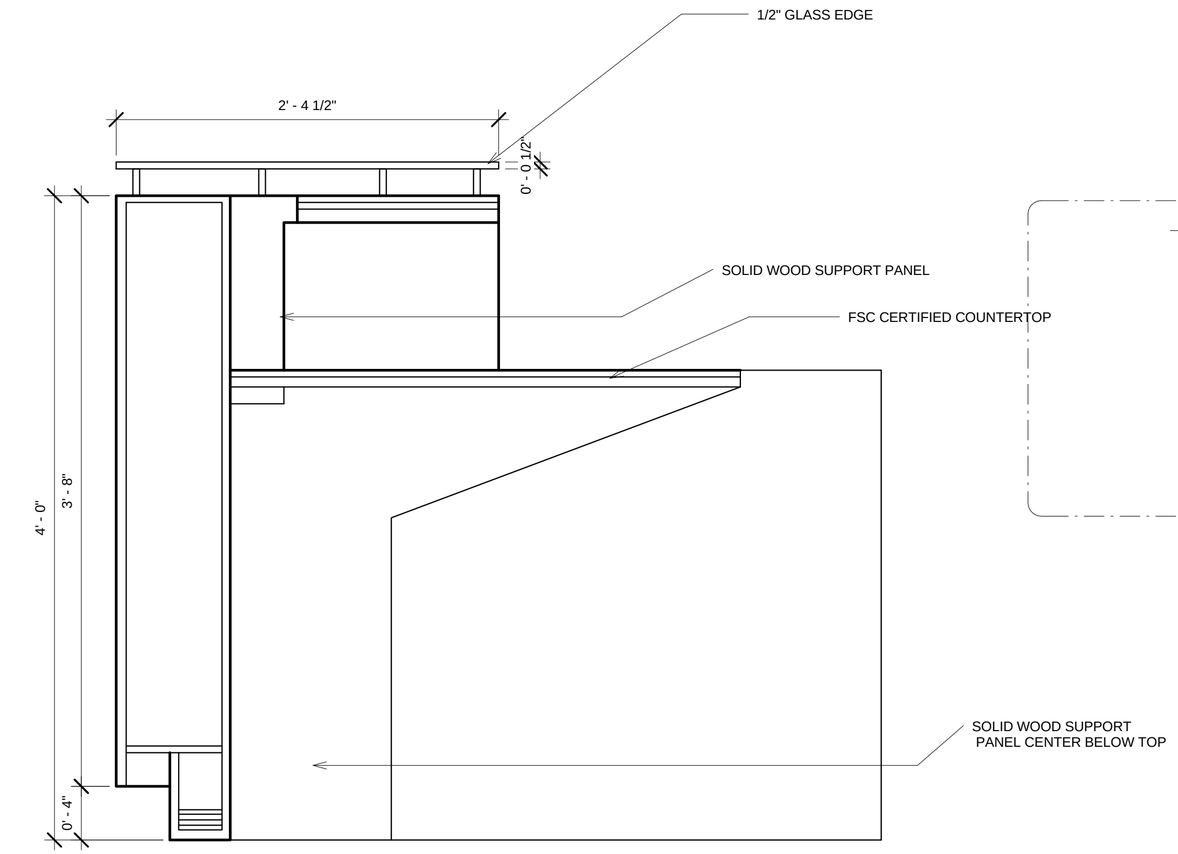

1 RECEPTION DESK
1 1/2" = 1'-0"

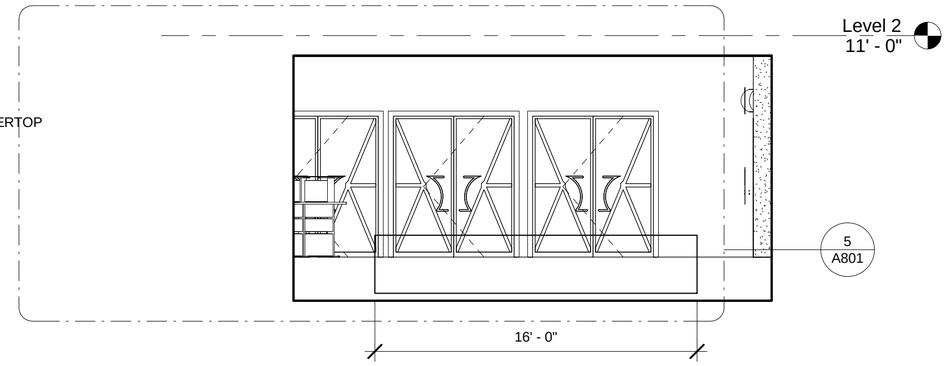

4 Reception Desk
3/16" = 1'-0"

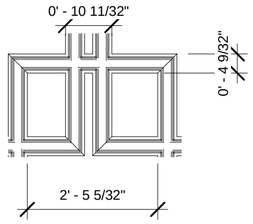

2 Wall Molding - Callout 1
1/2" = 1'-0"

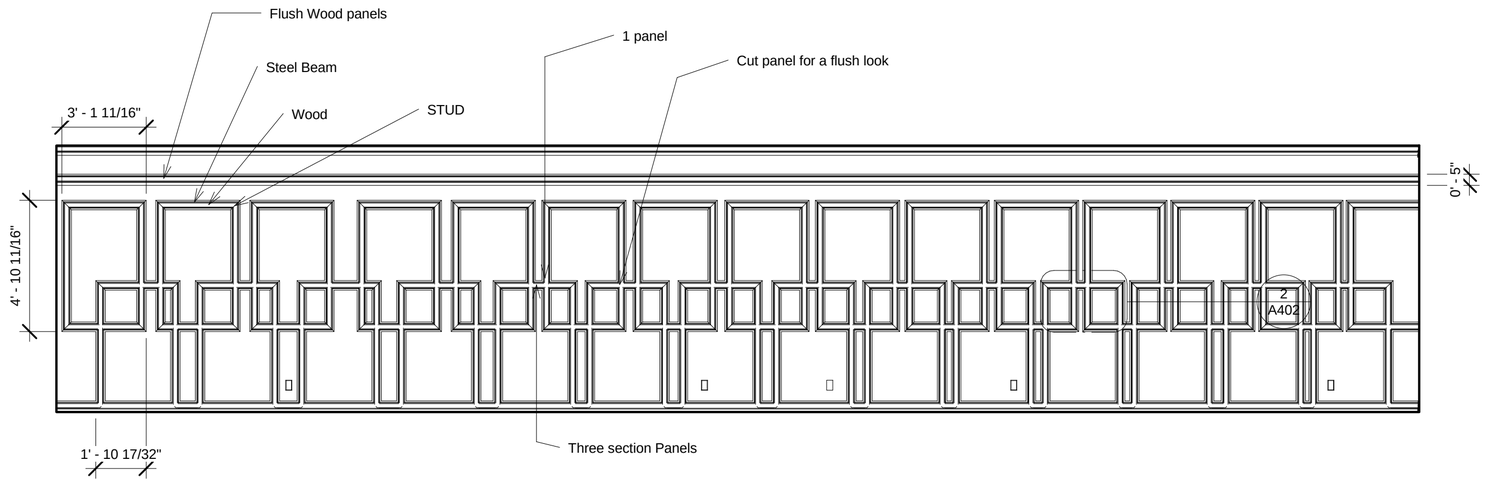

3 Wall Molding
1/4" = 1'-0"

OUMIE M. JALLOW

CONSTRUCTION DOCUMENTS
THE INTERNATIONAL BOARDING SCHOOL
OF FREE THOUGHT

DETAIL
DRAWINGS

A402

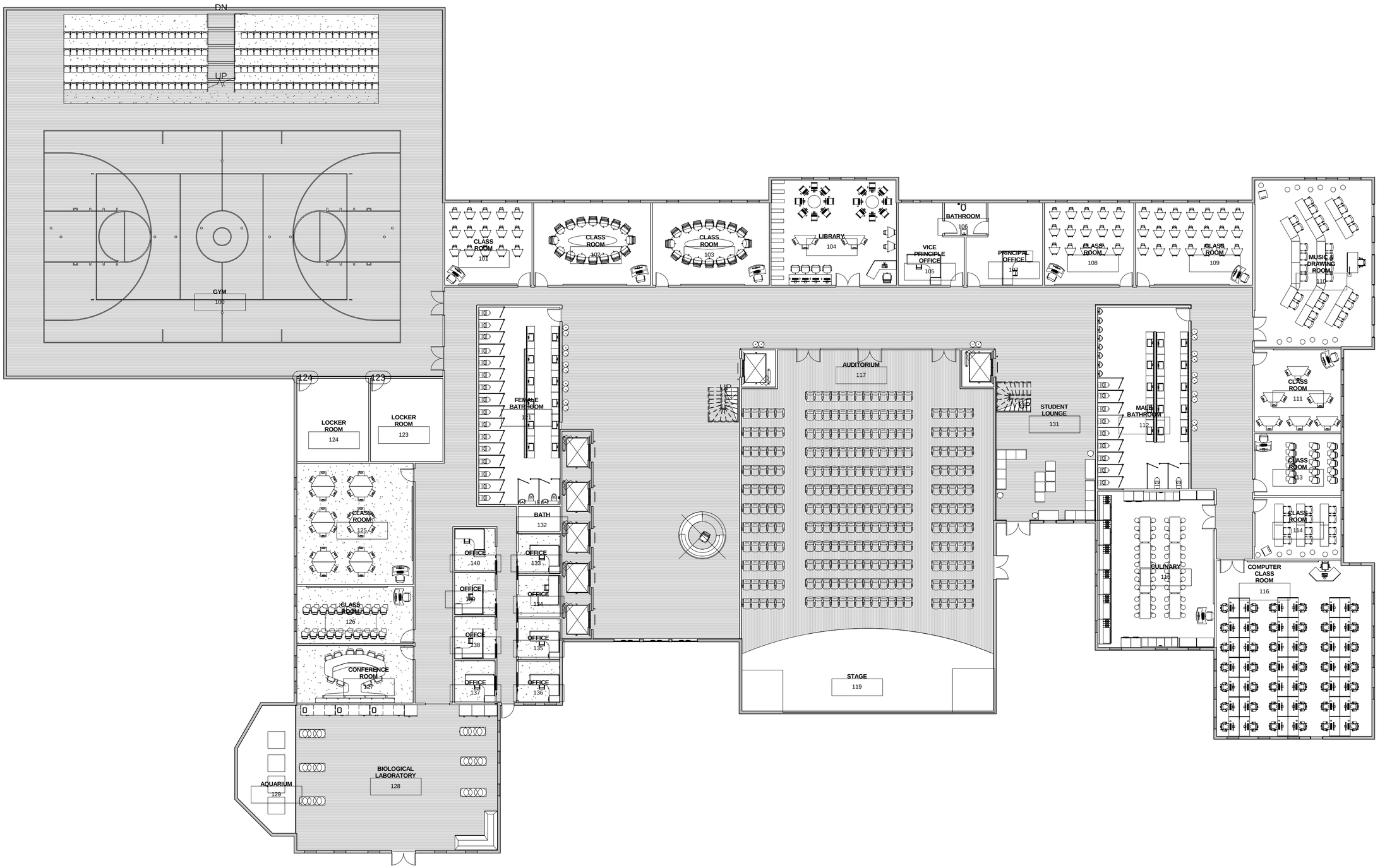

1 Level 1 FURNITURE
1/16" = 1'-0"

OUMIE M. JALLOW

CONSTRUCTION DOCUMENTS
THE INTERNATIONAL BOARDING SCHOOL
OF FREE THOUGHT

LEVEL 1
FURNITURE
PLAN AND
FINISH

A501

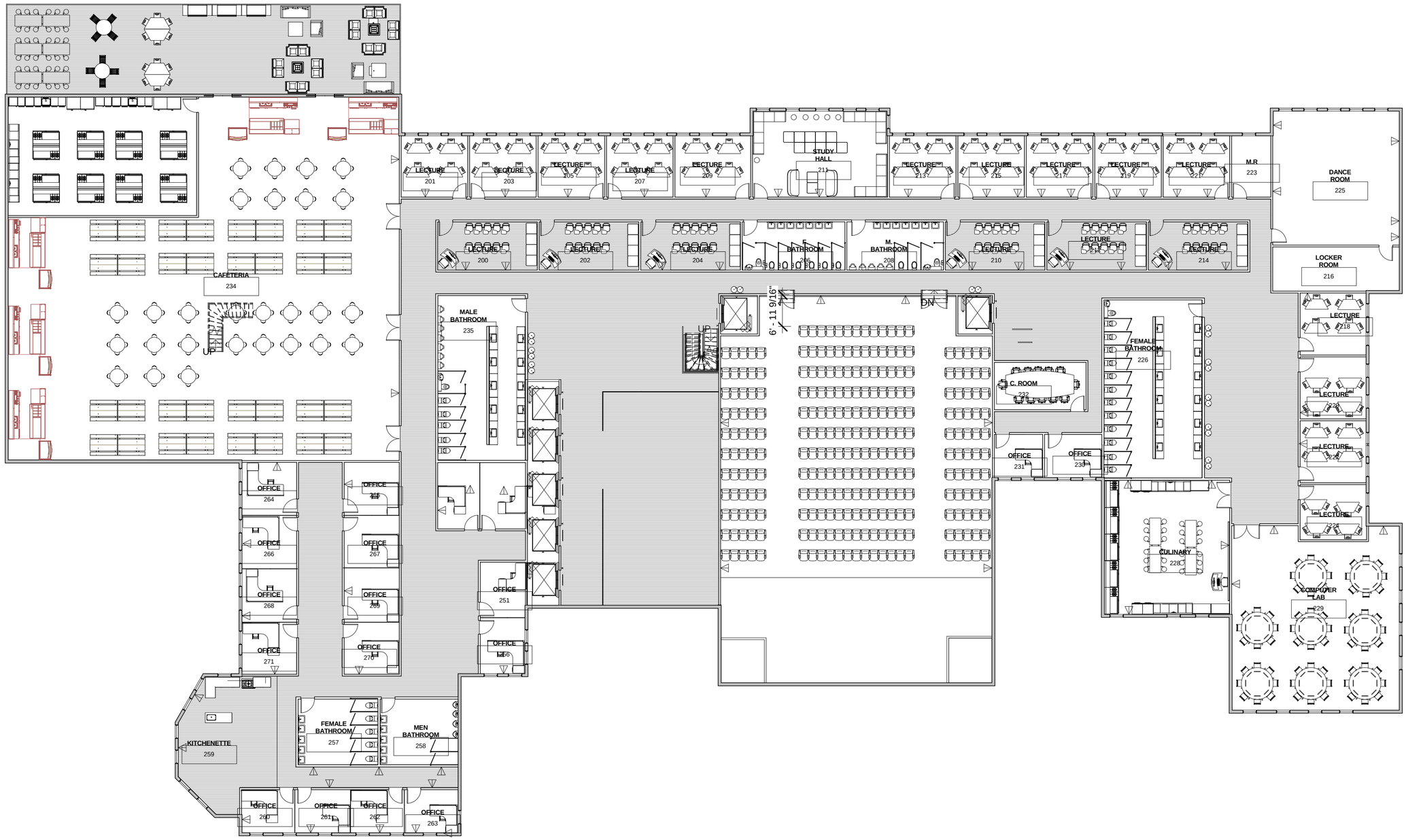

1 Level 2 Furniture
1/16" = 1'-0"

OUMIE M. JALLOW

CONSTRUCTION DOCUMENTS
THE INTERNATIONAL BOARDING SCHOOL
OF FREE THOUGHT

LEVEL 2 FURNITURE PLAN AND FINISH

A502



1 Level 3 FURNITURE
1/16" = 1'-0"

OUMIE M. JALLOW

CONSTRUCTION DOCUMENTS
THE INTERNATIONAL BOARDING SCHOOL
OF FREETOWN

LEVEL 3 FURNITURE PLAN AND FINISH SCHEDULES

A503

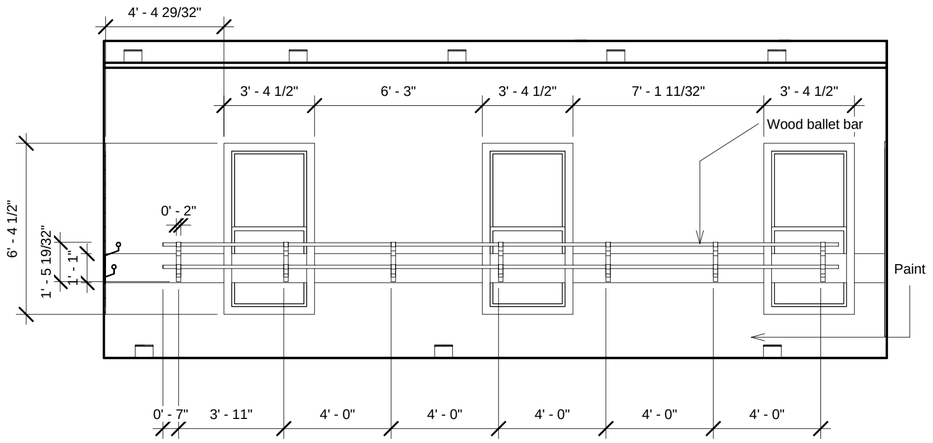

2 Dance Hall
1/4" = 1'-0"

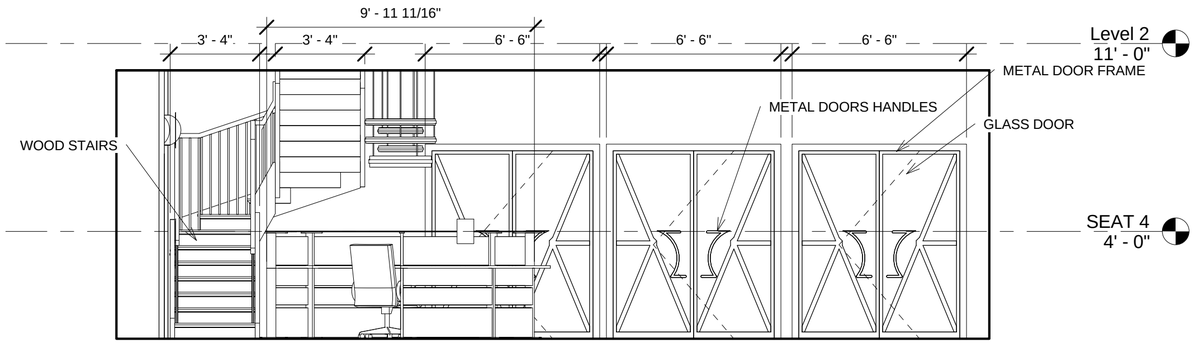

5 Elevation 1 - a - Callout 1
1/4" = 1'-0"

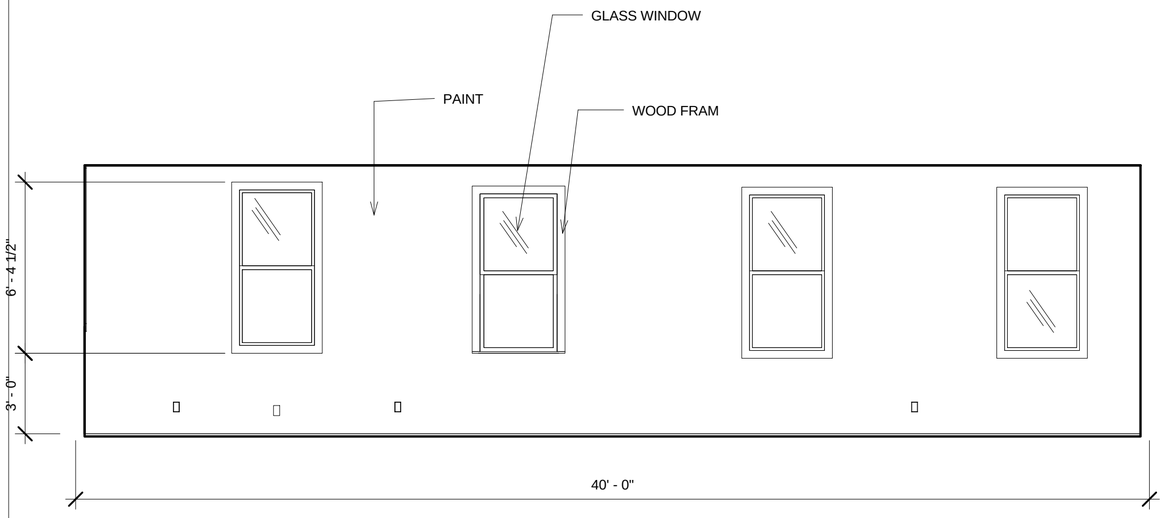

3 Dance Room
1/4" = 1'-0"

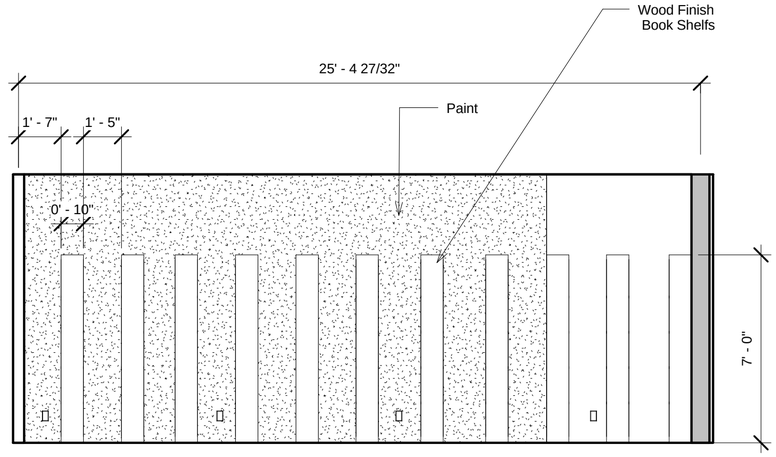

4 Library
1/4" = 1'-0"

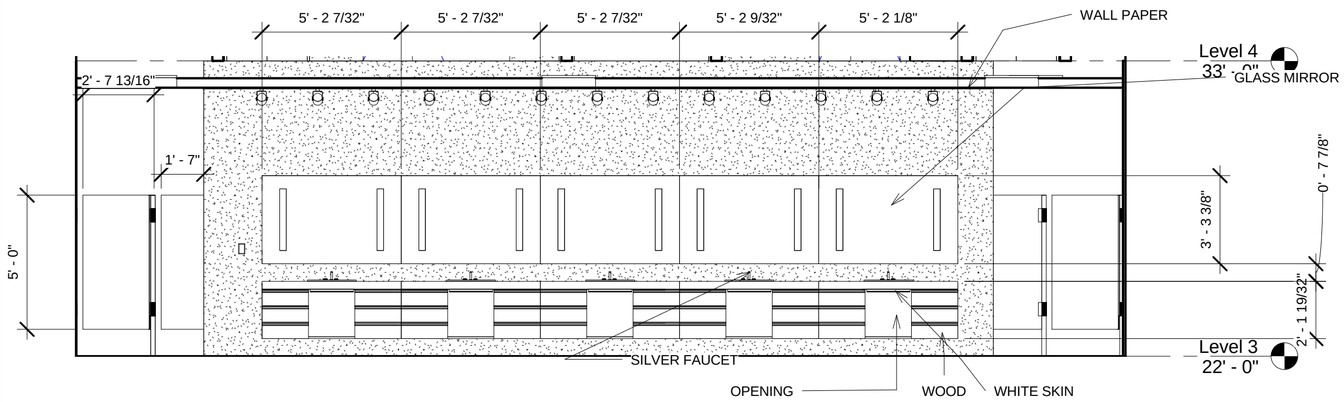

1 Bathroom
1/4" = 1'-0"

OUMIE M. JALLOW

CONSTRUCTION DOCUMENTS
THE INTERNATIONAL BOARDING SCHOOL
OF FREE THOUGHT

INTERIOR
ELEVATIONS

A801

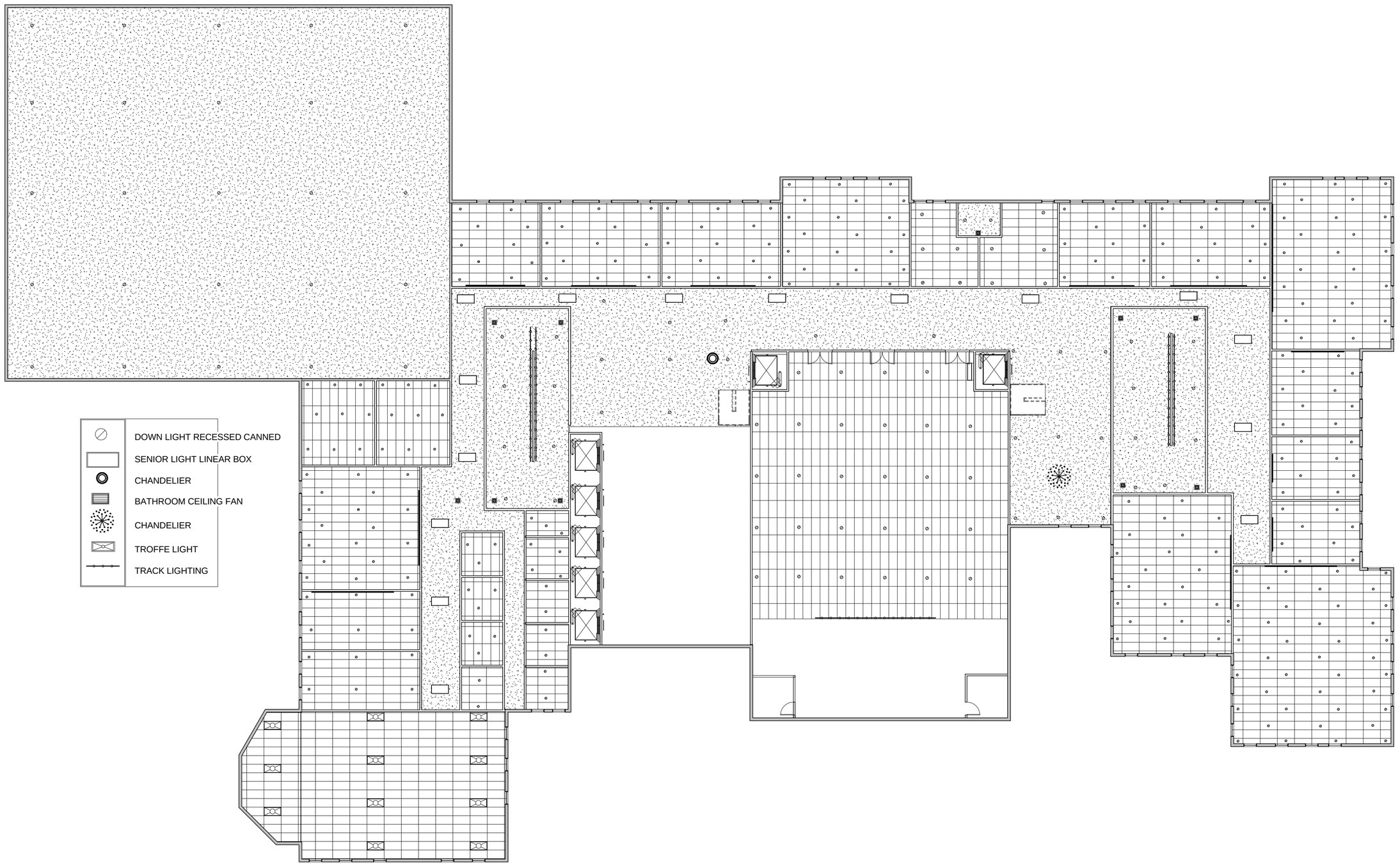

1 Level 1
1/16" = 1'-0"

OUMIE M. JALLOW

CONSTRUCTION DOCUMENTS
THE INTERNATIONAL BOARDING SCHOOL
OF FREE THOUGHT

LEVEL 1
REFLECTED
CEILING PLAN

A901

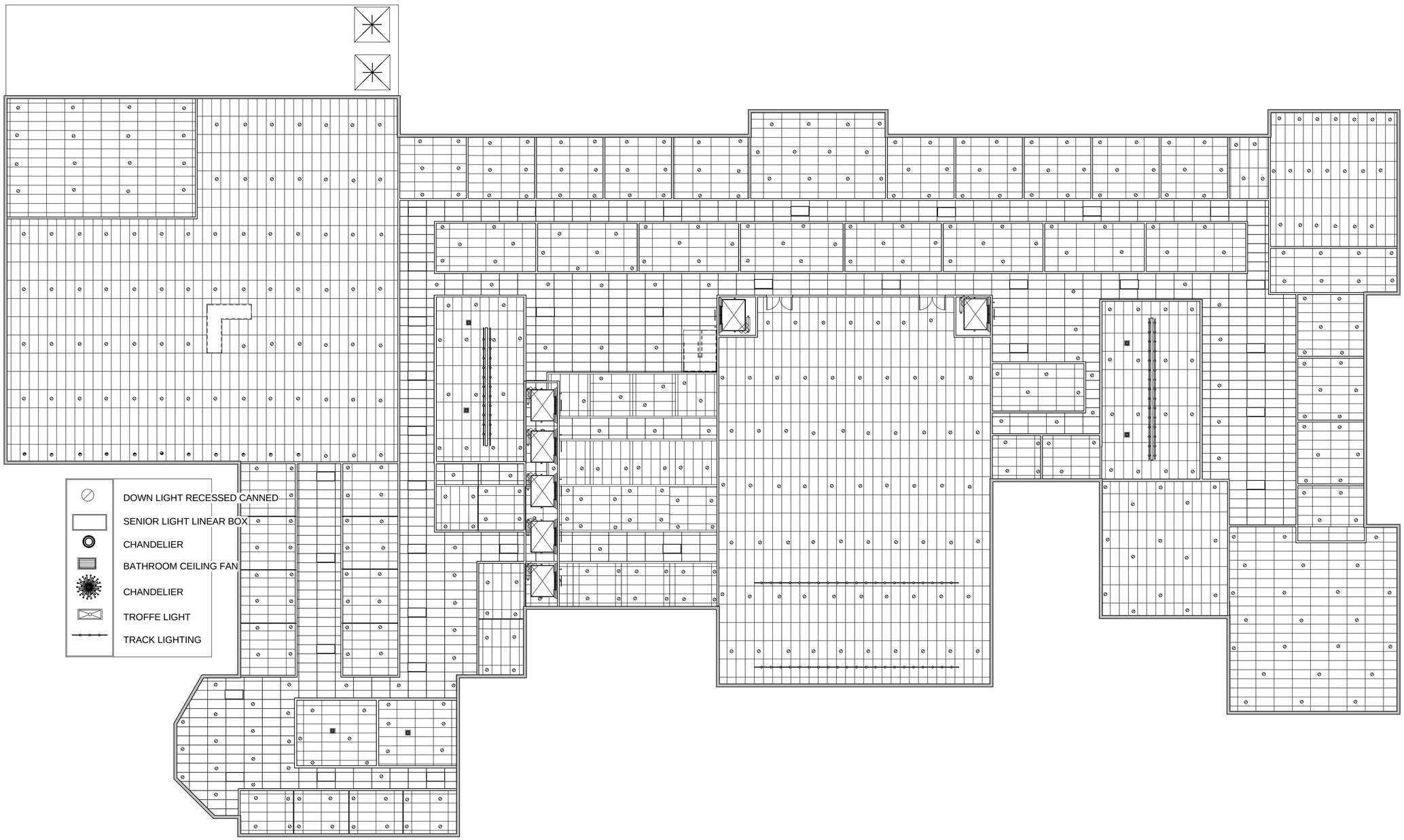

1 Level 2
1/16" = 1'-0"

OUMIE M. JALLOW

CONSTRUCTION DOCUMENTS
THE INTERNATIONAL BOARDING SCHOOL
OF FREE THOUGHT

LEVEL 2
REFLECTED
CEILING PLAN

A902

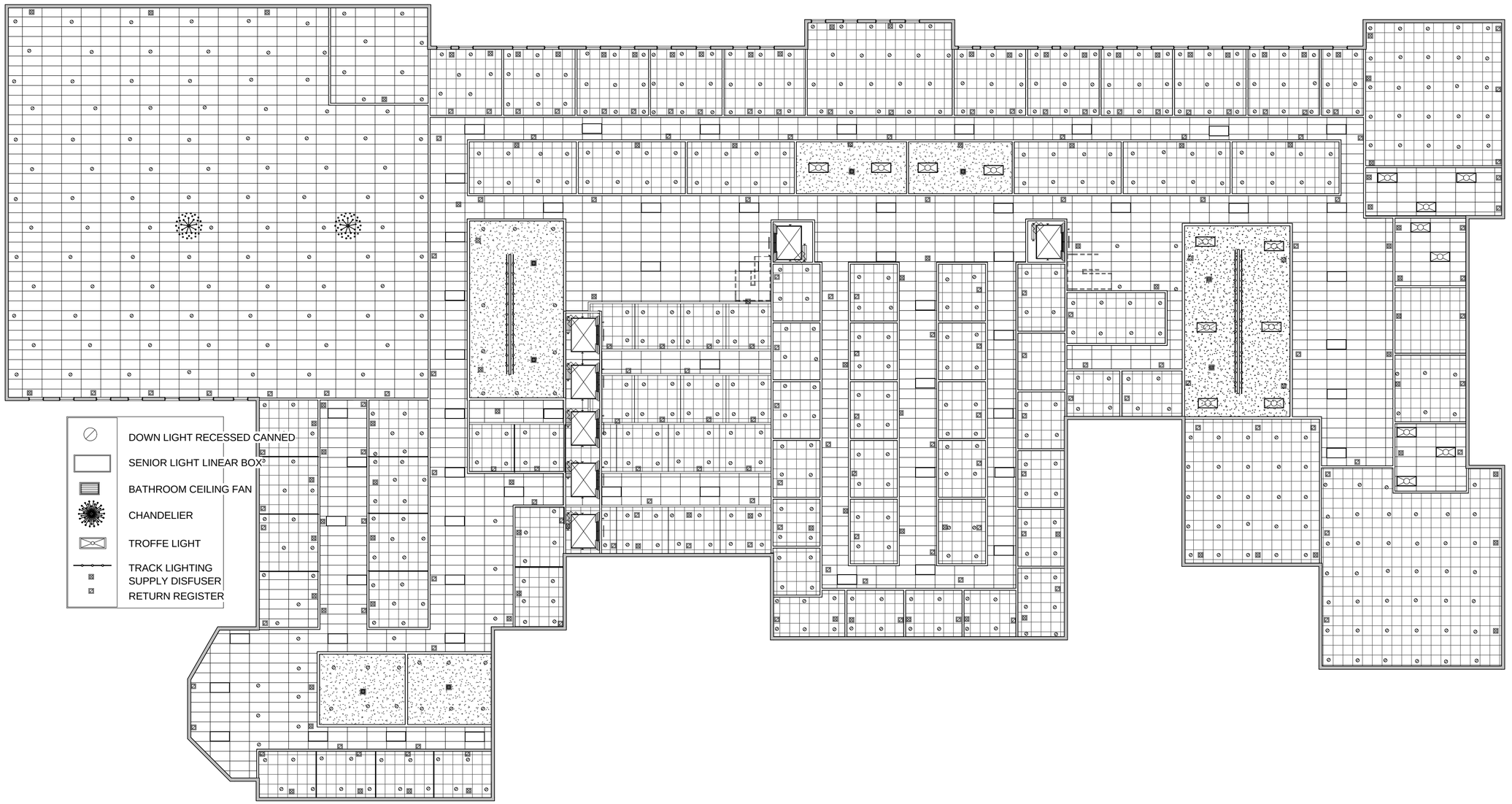

1 Level 3
1/16" = 1'-0"

OUMIE M. JALLOW

CONSTRUCTION DOCUMENTS
THE INTERNATIONAL BOARDING SCHOOL
OF FREE THOUGHT

LEVEL 3
REFLECTED
CEILING PLAN

A903